Dynamic Transistor/FET Tester

WT-524A

Operating and Maintenance Instructions

RCA Electronic Instruments

Optional Price 75 Cents

Safety Precaution

This instrument is equipped with a three-wire power cord which connects the metal case and ground lead to the power-line ground. To prevent lethal shocks or equipment damage when using the WV-524A with equipment not equipped with a three-wire power cord, ALWAYS ELECTRICALLY ISOLATE SUCH EQUIPMENT WITH AN ISOLATION TRANSFORMER , such as RCA WP-25A*, WP-26A*, or WP-27A Isotap.

All in-circuit tests using this instrument must be made with the equipment under test turned off. As an added precaution, it is recommended that the power cord of AC operated equipment be unplugged from the AC outlet prior to testing.

* Use isolated sockets only.

WT-524A Dynamic Transistor/FET Tester with Accessories.

Contents

	Page
Description	4
Specifications	4
Operation	
Simplified Test Procedure Charts	6
Testing Transistors (Bipolar) (Detailed Procedure)	7
Testing FET's (Detailed Procedure)	9
Testing Special Devices	
Darlington Transistors	11
Diodes	11
SCR/Triacs	12
Unjunction Transistors	12
Facts You Should Know about Testing Transistors	13
FET Test Precautions	13
Transistor Identification	14
Transistor Lead Connections	14
NPN or PNP	14
N or P Channel, Depletion or Enhancement FET's	16
Maintenance	17
Circuit Description	17
Schematic Diagram	20
WG-459A Schematic Diagram	21
WG-455A Schematic Diagram	21
Replacement Parts List	23

Information furnished by RCA is believed to be accurate and reliable. However, no responsibility is assumed by RCA for its use; nor for any infringements of patents or other rights of third parties which may result from its use. No license is granted by implication or otherwise under any patent or patent rights of RCA.

Trade Mark(s) ® Registered
Marca(s) Registrada(s)

WT-524A (1) 5/73
Printed in U.S.A.

Description

The RCA WT-524A is a high-quality Dynamic Transistor/ FET Tester designed for use in industrial applications, electronic laboratories, and service shops. The instrument provides an accurate reliable AC beta (h_{fe}) test of bipolar transistors, and a transconductance (Gm or g_{fs}) test of FET's. In addition to testing transistors, the WT-524A can also check diodes, SCR's, and triacs. Devices can be tested quickly and easily either in-circuit or out-of-circuit.

Field-effect transistors (FET's) that can be tested with the WT-524A include n- or p- channel junction FET (JFET's), and n- or p- channel, depletion or enhancement type metal-oxide-semiconductor FET (MOS FET's). FET's are tested for Gm up to 100,000 micromhos in two ranges. Other measurements include zero-bias drain current (I_{DSS}) and DC drain current (I_D) up to 20 mA, and out-of-circuit gate leakage. A special control is provided to establish the drain current at 10 mA (or as high as 20 mA if desired) for testing enhancement-type FET's.

Transistors (bipolar) are tested for AC beta from 0 to 1,000 in two ranges. A special "Beta X 50" function is provided for testing Darlington and power Darlington devices with beta gains up to 5,000. The instrument also measures collector-to-base leakage (I_{CBO}) up to 100 μA and collector-to-emitter leakage (I_{CEO}) up to 200 mA.

The collector current for bipolar transistors is variable allowing different transistor types to be tested at appropriate current levels. Collector current calibration points are provided for low-power (signal type), intermediate power, and power transistors. Because the current level adjustment is continuous, a complete AC beta current curve (beta vs collector current) can be plotted through the Ic range of the instrument.

As a special feature, two convenient plug-in "universal" socket adapter units, the WG-454A FET Test Adapter and the WG-455A Transistor Test Adapter, are included with the instrument. These adapters provide sockets for testing a wide variety of devices including dual units and dual-gate FET's. For in-circuit testing, color-coded test leads with "E-Z-Hook"* connectors are supplied. The instrument panel jacks have standard 3/4-inch spacing to accommodate the WG-454A, WG-455A or other types of production test adapters. A bracket is provided on the back of the instrument for storage of the test lead and power cord. Special fastening material also permits convenient storage of the two Test Adapters.

The WT-524A operates from a 120-240 volt, 50-60 Hz power line —— no batteries are required. It has a large easy-to-read mirrored-scale meter, with special scales for I_C, I_{CBO}, I_{CEO}, I_{DSS}, and I_D currents. The instrument is attractively styled with a rugged diecast aluminum case and color-coded aluminum panel.

* Registered trademark of E-Z-Hook, Arcadia, California.

Specifications

TRANSISTOR (BIPOLAR) TEST

AC Beta, Three Ranges	0 to 100 0 to 1,000 0 to 5,000 (Darlington)
Collector Current (I_C)	Continually adjustable from 0 to 200 mA, with cal. points at 10 mA and 100 mA.
Collector-to-Base Leakage (I_{CBO})	0 to 100 μA
Collector-to-Emitter Leakage (I_{CEO})	0 to 200 mA
Test Voltage	4 Volts
Accuracy (at selected current level)	± 3%

FET TEST

Types	MOS, Junction; Depletion, Enhancement, N or P Channel
Transconductance; (Gm or g_{fs}) Two Ranges	0 to 10,000 μmhos 0 to 100,000 μmhos
Zero-Bias Drain Current (I_{DSS})	0 to 20 mA
Drain Current (I_D)	0 to 20 mA
Gate Leakage Current (I_{GSS})	Leakage Test pushbutton on WG-454A FET Socket Adapter.
Test Voltage	Approx. 12 Volts (regulated)
Accuracy (at selected current level)	± 3%

DIODE TEST

Current Range (fwd)	
Signal & low-current types	0 to 10 mA (using ext. 470 Ω series resistor)
Power types	0 to 200 mA

LEADS AND SOCKETS

Test Leads, WG-460A	Three, with special color-coded connectors for in-circuit tests.
WG-454A	Universal FET Socket Adapter. Has four sockets, including dual gate and dual unit sockets. Has leakage test pushbutton switch.
WG-455A	Universal Transistor Socket Adapter. Has four sockets, including dual socket and switch.

POWER SUPPLY

Operates from either 120V or 240V, 50/60 Hz power line. Convenient 120V/240V internal switch is provided. Includes 3-wire power cord.

DIMENSIONS (less handle and accessories)

Height	6-1/2 inches (16.5 cm.)
Width	7 inches (17.7 cm.)
Depth	4-1/4 inches (10.8 cm.)

WEIGHT (Incl. accessories) . . . . . 5 lbs. 12 oz. (2.6 kg)

Operation

SIMPLIFIED TRANSISTOR (BIPOLAR) TEST PROCEDURE

Set Selector Switch to NPN or PNP, as appropriate. Pre-set "I_C/I_D CAL" and "BETA/Gm CAL" controls CCW. For in-circuit test, disregard Steps 1, 2, and 3.

	STEP 1	STEP 2	STEP 3	STEP 4	STEP 5
Set Function Switch To →	I_{CBO}	I_{CEO}	I_C CAL	BETA CAL	BETA
	Meter reading on I_{CBO} scale: ——— Silicon types "O" ——— Germanium types, less than 100 μA	Meter reading on I_D/I_{CEO} scale: ——— Silicon types "O" ——— Lowpower germanium types, "O" or slightly higher.	Adjust I_C/I_D CAL to set meter on I_C scale as follows: ——— Small-signal RF types, set control fully CCW ——— Most small-signal transistors – LOW ——— Medium power transistors – MED ——— Power transistors – PWR	Adjust BETA/Gm CAL. control to set meter on BETA scale as follows: ——— Small-signal RF types – BETA X10 ——— All other types. BETA 100 or less – BETA CAL X1 BETA over 100 – BETA CAL X10	Read gain on BETA scale. Mult. by 10 of BETA CAL X10 was used.

See page indicated for testing special devices.
Diodes, page 11.
Darlington transistors, page 11.
SCR's triacs, page 12.
UJT's, page 12.

SIMPLIFIED FET TEST PROCEDURE

Set Selector Switch to DEP N or P, ENH N or P as appropriate
For in-circuit test, disregard Steps 1, 2, and 5.

	STEP 1	STEP 2	STEP 3	STEP 4	STEP 5
Set Function Switch to →	I_{DSS}	I_D CAL (ENH)	Gm CAL	Gm X1 or Gm X10	Same As Step 4
Depletion Types	Read 0 to 20 mA on I_{DSS} scale.	———	Adjust BETA/Gm CAL to set meter to Gm CAL (full-scale).	Read Gm (g_{fs}). Mult. by 10 if switch is set to Gm X10	Press LEAKAGE TEST pushbutton on WG-454A. I_{GSS} leakage indicated if pointer moves downscale from Gm reading.
Enhancement Types	Meter will read "O"	Adjust I_C/I_D CAL control to set meter to "NORM I_D CAL (ENH)"			

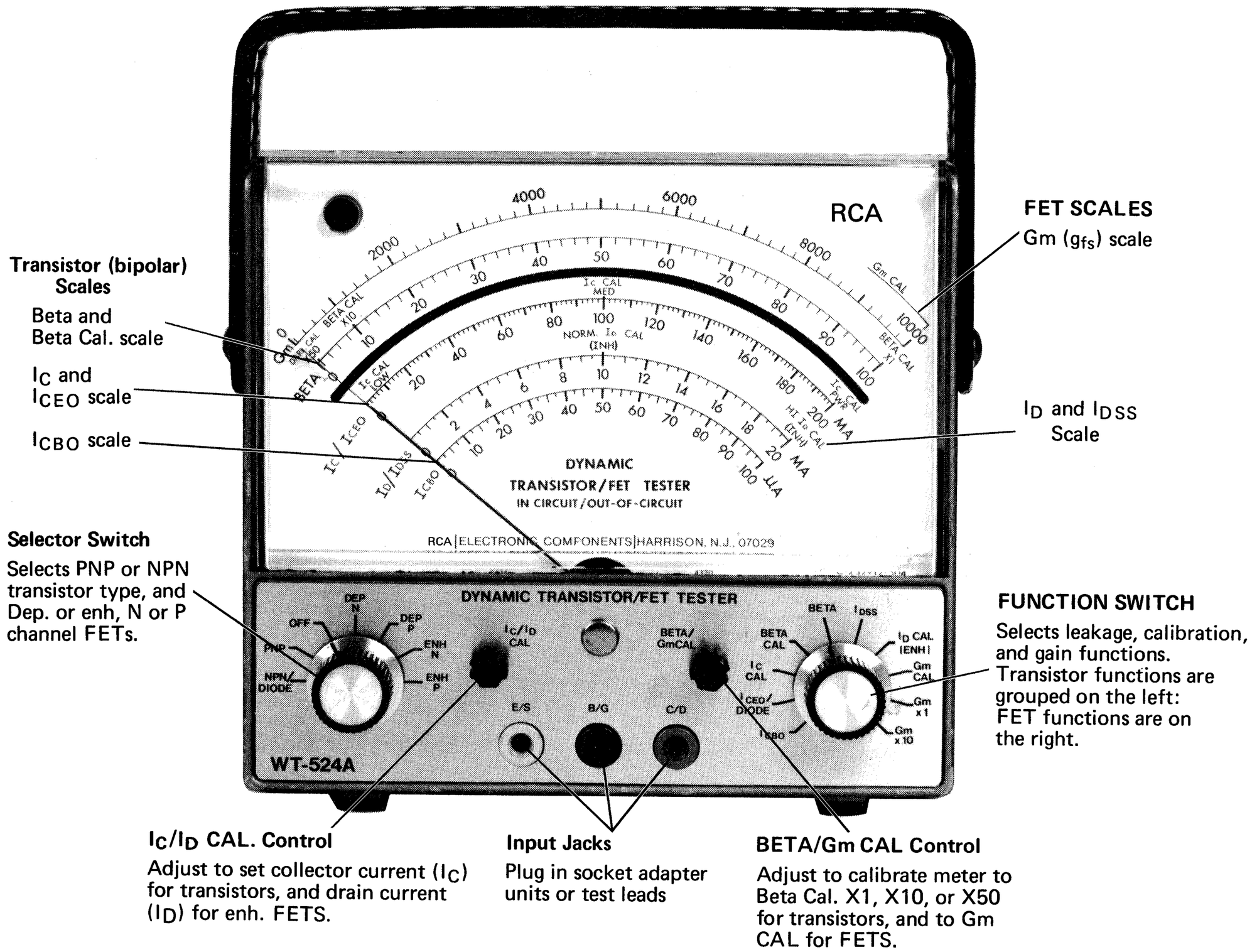

Figure 1. Identification of WT-524A switches, controls, and meter scales.

TESTING TRANSISTORS (BIPOLAR)

(detailed procedure)

Note: The test procedure is essentially the same for transistors either in-circuit or out-of-circuit, except that no leakage tests are made for in-circuit devices.

For most out-of-circuit tests, insert the WG-455A Socket Adapter into the panel jacks. For in-circuit tests, and for testing transistors that do not fit the adapter sockets, use the test leads. Insert the transistor into the appropriate socket or connect the test leads to the device leads.

To test dual transistors using the WG-455A adapter, perform the complete test first with the WG-455A switch on "1", then again with the switch on "2".

Turn the Selector Switch to "NPN" or "PNP" depending on the transistor type.

IMPORTANT: When making in-circuit tests, remove power from the circuit under test.

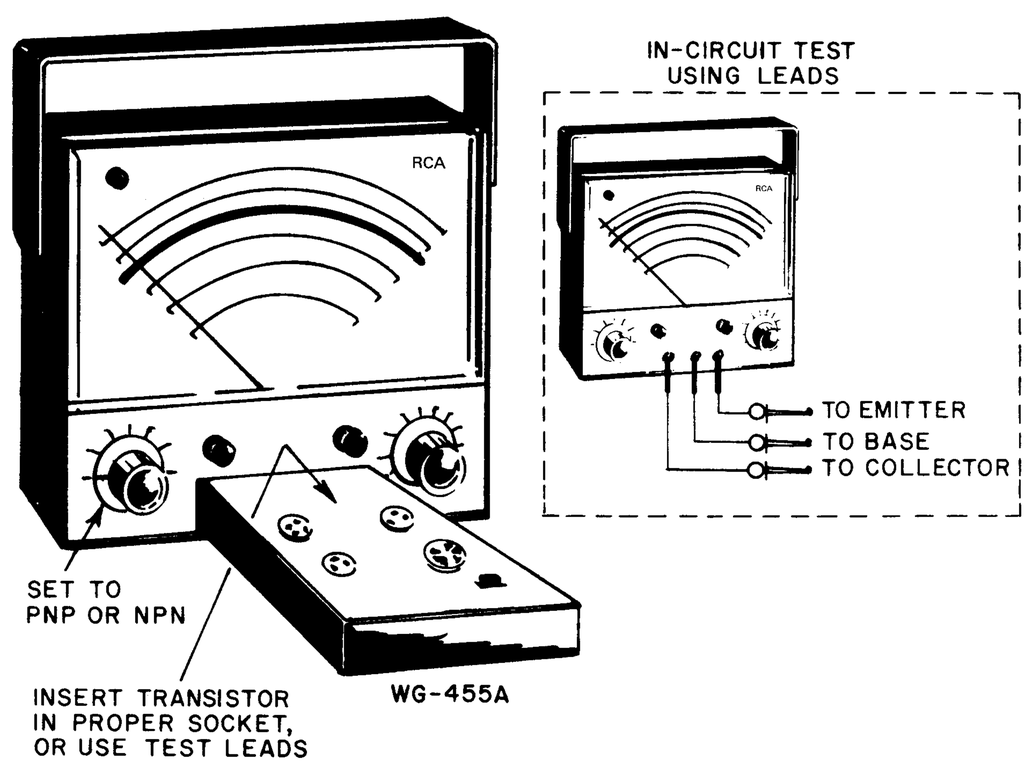

A. Leakage Test (Out-of-Circuit Test Only)

1. **I_{CBO} (Collector-to-Base) Leakage Test**
   Set the function switch to "I_{CBO}". I_{CBO} leakage up to 100 μA will be indicated on the 0-to-100 I_{CBO} Scale.

   The I_{CBO} reading for most silicon transistors will be less than 1 μA; however, I_{CBO} for some power types may indicate as high as 50 μA. The I_{CBO} reading for most low-power germanium transistors will be less than 100 μA, but some germanium power transistors have an I_{CBO} exceeding 100 μA causing the meter to peg on the I_{CBO} test.

2. **Collector-to-Emitter (I_{CEO}) Leakage Test**
   Set the function switch to "I_{CEO}". I_{CEO} leakage from 0-to-200 mA will be indicated on the 0-to-200 I_{CEO} Scale.

   The value of the I_{CEO} reading will always be greater than the I_{CBO} reading. However, excessive leakage is indicated if the I_{CEO} reading is significantly higher than the I_{CBO} value multiplied by the beta reading.

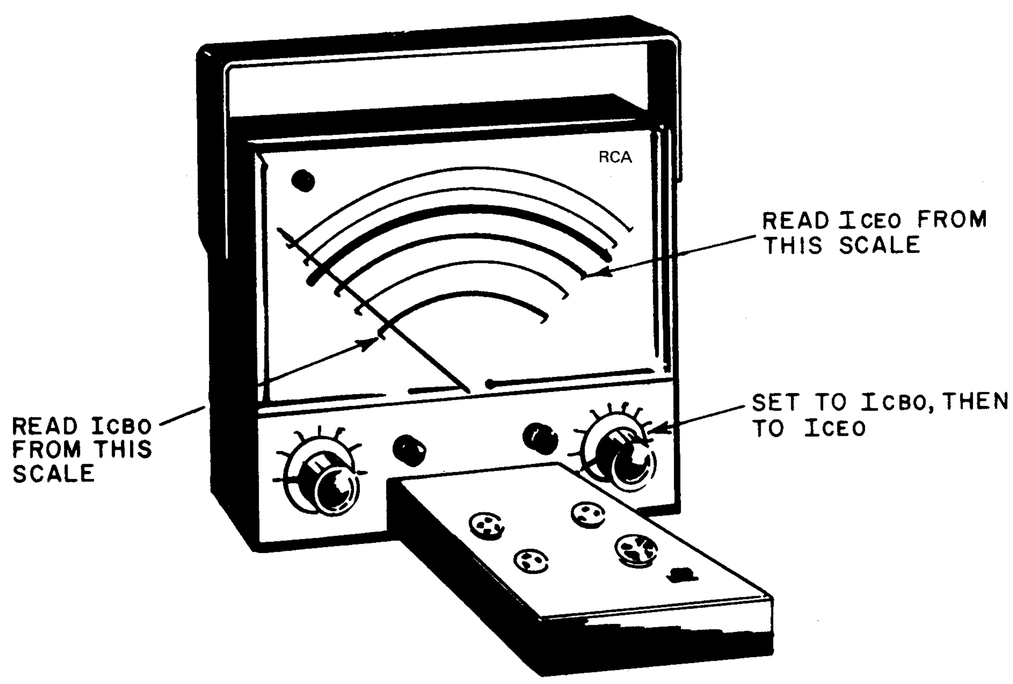

B. Beta Test

1. Set the Function Switch to "I_C CAL." For in-circuit tests, turn the "I_C/I_D CAL" control full counter-clockwise. For out-of-circuit tests, adjust the "I_C/I_D CAL" control to set the meter pointer to one of the I_C CAL marks on the I_C/I_{CEO} scale, as noted below

   Special very low signal types* ——— turn I_C CAL control fully CCW.

   Most Low-Power, Signal Types ——— LOW (10 mA on 0-to-200 mA I_C Scale)

   Intermediate and Low Power Types ——————————— MED (100 mA)

   Power Types——————PWR (full-scale, 200 mA)

   If I_C CAL cannot be set properly at the appropriate current level, the transistor is defective.

   Note: For special applications, such as plotting an AC beta curve, set to any level from 0 to 200 mA.

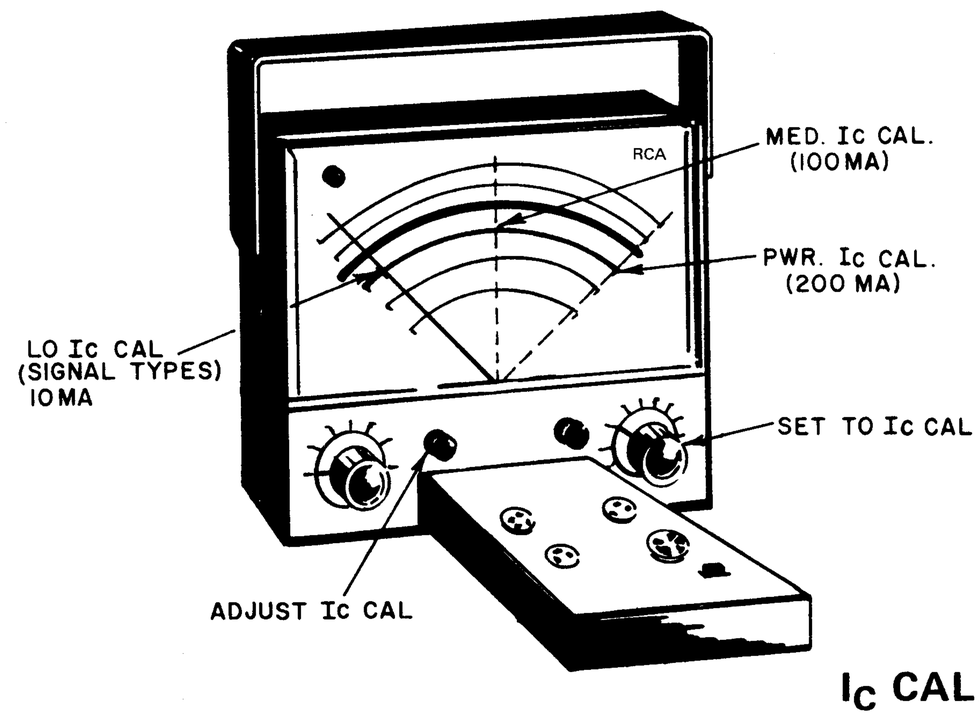

I_C CAL.

* *Note:* A few special transistors, usually RF signal types, require very low I_C level to operate properly. These transistors that require less than 10 mA collector current should be tested with the "I_C CAL". control turned fully counterclockwise. The AC signal itself will develop enough collector current for the device to operate. Also, to keep the collector current at a minimum, the "BETA CAL." control should be adjusted to the "X10" position. Multiply the beta reading by ten. The beta reading for these transistors will usually be lower than the published data. This is due to the data being based on a very low Ic level.

2. Set the Function Switch to "BETA CAL." Adjust the "BETA/G_m CAL" control to set the meter pointer either to the "BETA CAL X1" mark or the "BETA CAL X10" mark on the BETA scale.

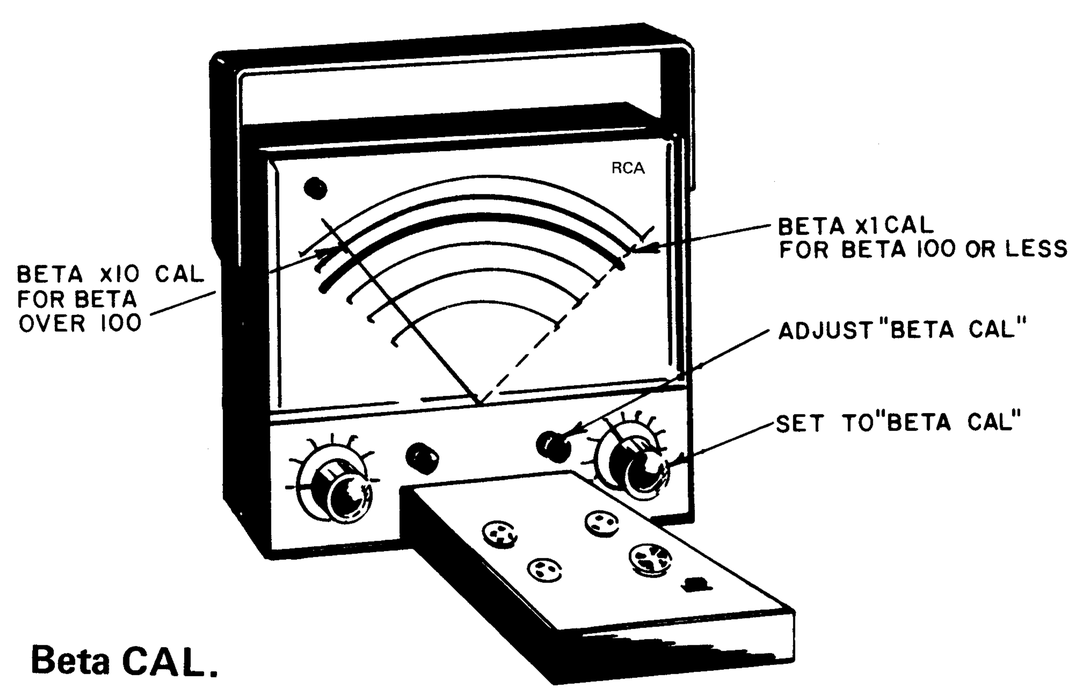

Beta CAL.

Use the "X1" mark if the expected beta level is below 100, or is unknown.

Use the "X10" mark if the expected beta level is above 100.

Note: Very low power types (less than 10 mA) should be calibrated on BETA X10).

3. Set the function switch to "BETA" and read beta (or in-circuit gain) on the BETA scale.

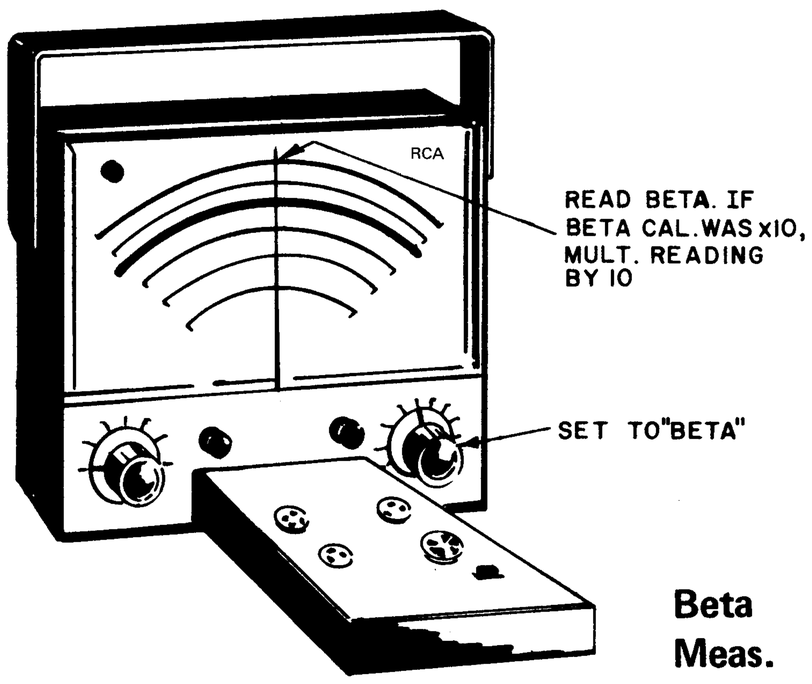

Beta Meas.

If Beta Cal. was set to the "X1" mark, read beta (h_{fe}) directly.

Note: If meter pegs indicating beta is over 100, repeat Beta Cal. procedure, setting the pointer to the "X10" mark.

If Beta Cal. was set to the "X10" mark, multiply the scale reading by 10. Full scale reading will be 1,000.

In general, beta should be above 20, although some silicon power transistors have beta as low as 10. Beta may be as high as several hundred. Normally, other than an outright failure, beta for a transistor does not change significantly. Thus, if a reasonable beta reading is obtained, the transistor can be considered good.

The in-circuit gain measurement often will be lower than out-of-circuit beta measurement for the same transistor, depending on the resistance of the circuit. In some special applications such as TV horizontal deflection stage, the circuit resistance is so low that the transistor cannot be tested in-circuit. These transistors are usually inserted in sockets, however, and can easily be removed and tested out-of-circuit.

(See page 11 for testing Darlington transistors).

TESTING FET's

(detailed procedure)

The test procedure for in-circuit or out-of-circuit FET's is essentially the same, except that no I_{DSS} leakage or I_{GSS} measurements are necessary when testing in-circuit devices.

For out-of-circuit tests, insert the WG-454A Socket Adapter into the panel jacks. For in-circuit tests use the test leads.

IMPORTANT: Remove power from test circuit during in-circuit measurements.

Set the Selector Switch to correspond to the device under test (n or p channel, depletion or enhancement). Insert the FET into the appropriate WG-454A socket, or for in circuit tests, connect the test leads to source, drain and gate elements.

Note: To test dual-gate FET's, perform the entire test first with the adapter gate slide switch on "G1," then set the switch on "G2 and repeat the test. To test dual unit FET's, perform the entire test first with the "Dual" slide switch on "1", then set the switch on "2" and repeat the test.

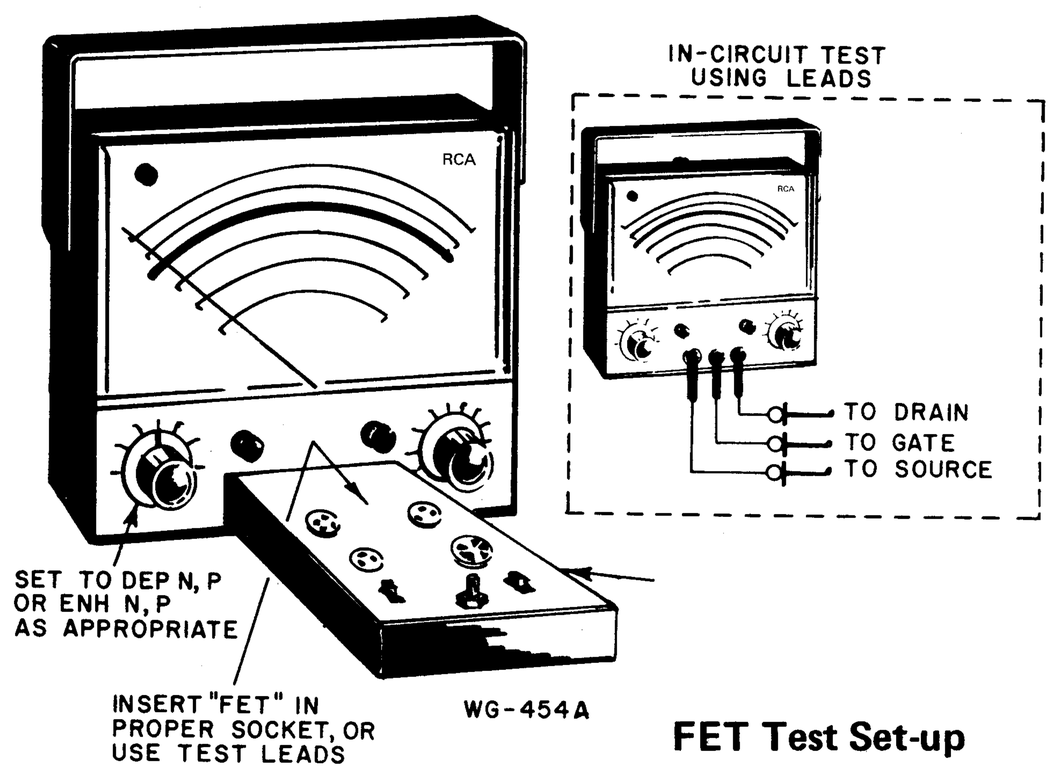

FET Test Set-up

A. **I_{DSS} Leakage Test (Out-of-Circuit Only)**

Set the Function Switch to I_{DSS}. Read I_{DSS} current from 0 to 20 mA on the I_D/I_{DSS} scale. For most depletion types, I_{DSS} should be between 5 mA and 20 mA. For enhancement types, I_{DSS} will be zero.

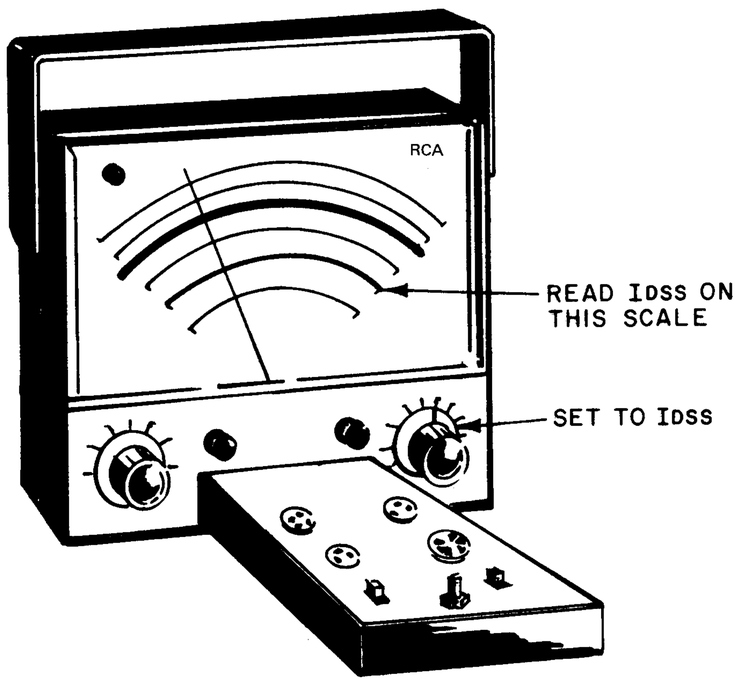

I_{DSS} Test

2. Set the Function Switch to "Gm CAL." Adjust the "BETA/Gm CAL" control to set the meter pointer to the "Gm CAL" position (full-scale).

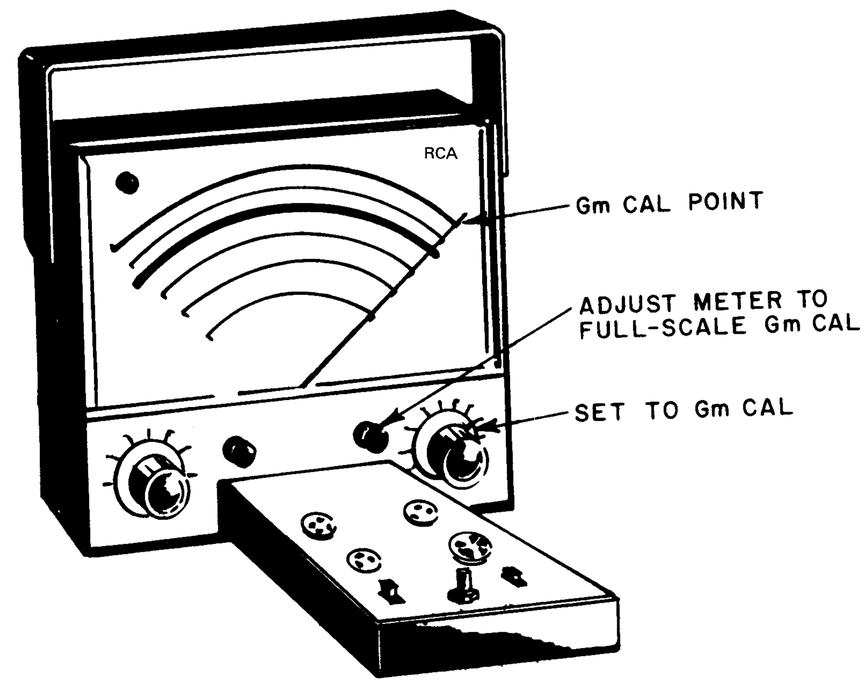

Gm CAL.

B. FET Gm (g_{fs}) Test

1. This step applies only to testing devices out-of-circuit. Set the function Switch to "I_D CAL"
   Depletion Types: —— Read I_D from 0 to 20 mA on the I_D scale. I_D reading should be the same as the I_{DSS} reading. Set I_D/I_C cal to max
   Enhancement Types: —— Calibrate I_D by adjusting the "I_D/I_C CAL" control to set the meter pointer to the "NORM I_D CAL" mark (10 mA, center scale).

3. Set the Function Switch to "Gm X1." Gm (or in-circuit gain) from 0 to 10,000 will be indicated on the Gm scale. If no reading is obtained, the device is defective. If Gm is over 10,000, the meter pointer will peg. If it does, set the function switch to "Gm X100." Multiply reading by 10, extending the Gm range to 100,000 micromhos (at full scale).

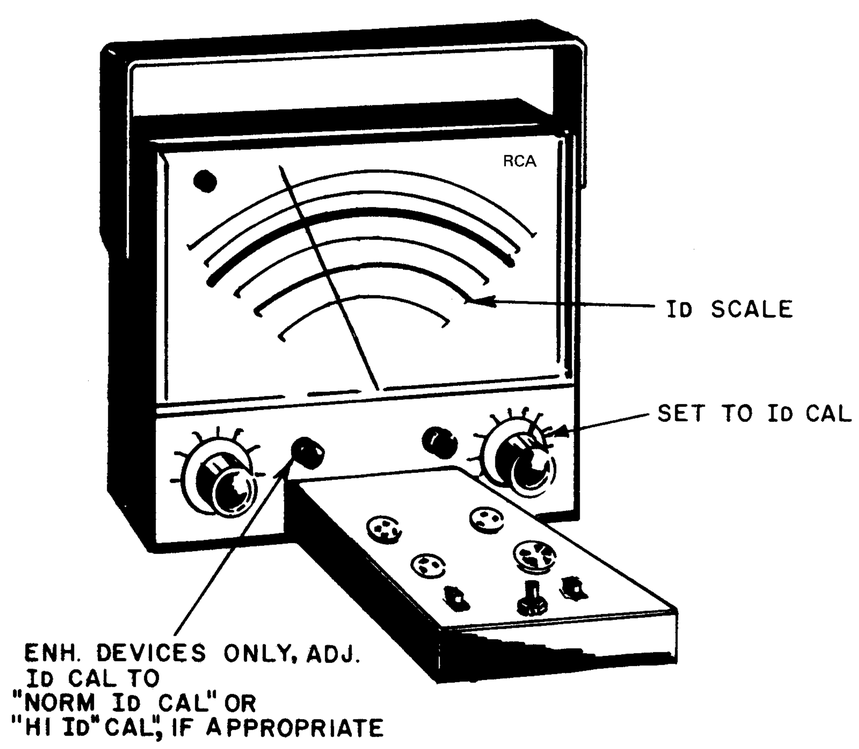

I_D Test

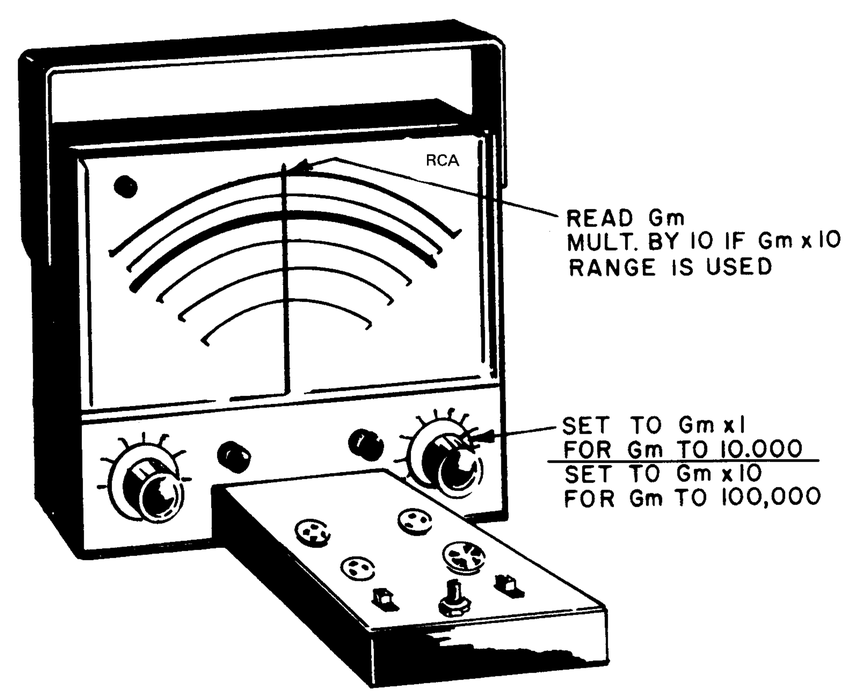

Gm Test

Gate Leakage Test (I_{GSS}) (Out-of-Circuit Only)

4. Gate leakage can be measured only when the WG-454A Socket Adapter is used. An in-circuit gate leakage test would be inaccurate because of the circuit gate resistors. While measuring Gm, press the pushbutton "Leakage Test" switch on the adapter. Gate leakage will be indicated if the pointer moves downscale from the Gm reading. For an insulated gate FET, no significant change should occur. For junction types however, some leakage will be noted, but the leakage should not cause more than a 50% drop in Gm reading. A drop of one Gm division corresponds to approximately 100 megohms of gate leakage. This is equivalent to 10 nA of I_{gss}.

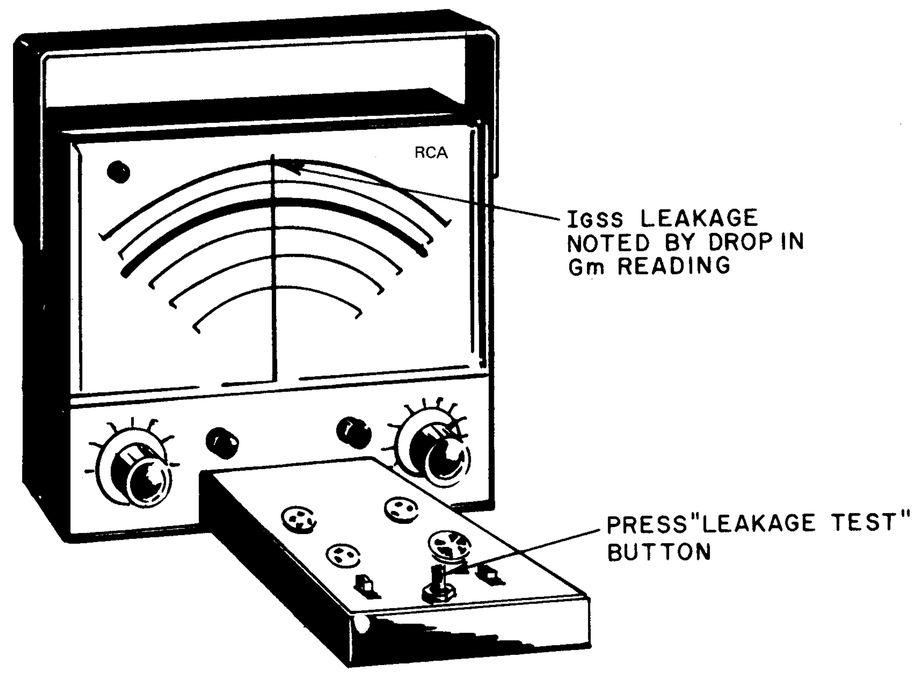

Gate Leakage Test

TESTING SPECIAL DEVICES

Testing Darlington Transistors

A special "X50" calibration point is provided for testing Darlington transistors. When the calibration point is used, beta values up to 5,000 can be measured.

Follow the basic instructions for transistor testing, but in the Beta Cal. procedure, calibrate to the "DARL. CAL X50" mark at the left side of the Beta Scale. It is important that this adjustment be made very carefully to insure accurate calibration. Tap the meter gently with your finger to release any meter friction, and use the mirror scale to insure that the reading is correct, with parallax.

Adjust I_C calibration as for other transistors, if the device is a power type, use the "I_C CAL PWR" calibration mark. When reading Beta, multiply the Beta scale reading by 50.

Note: Some low-signal type Darlington transistors require an extremely low input signal and low collector current (10 mA). In the test procedure these devices will saturate, so that the Gm test reading will not represent the maximum gain. However, the test is a reliable indication that the device is functioning properly.

Testing Diodes

The WT-524A is a convenient instrument for making a check of the relative front-to-back ratio of diodes. An important feature is the ability to check the diode at an appropriate current level.

Procedure

1. Set the Selector Switch to "NPN/DIODE," and the Function Switch to "I_{CEO}/DIODE."
2. If the diode is a low-current signal type, connect a 470-ohm resistor in series with the diode. This will limit the forward current to about 10 mA. If the diode is a high-current, power type (rated above 0.5A) the 470-ohm resistor is not necessary.
3. Connect the collector test lead to the diode cathode, and the emitter lead to the anode, after the series resistor (see illustration). Reverse leakage will be indicated on the 0 to 200 mA scale. The reading should be "0".
4. Set the Selector Switch to "PNP". If the diode is good, forward conduction meter readings will be obtained as follows:

   Low power, signal diodes (using 470-ohm resistor). Reading will be between 0 and 10 at far left of the 0 to 200 mA scale.

   Power diodes (no series resistor used). Reading will be far up-scale, usually pegging off-scale at right side. (This will not harm meter movement).

   If no meter reading is obtained, the device is open. If the meter pegs in both NPN and PNP positions, the diode is shorted.

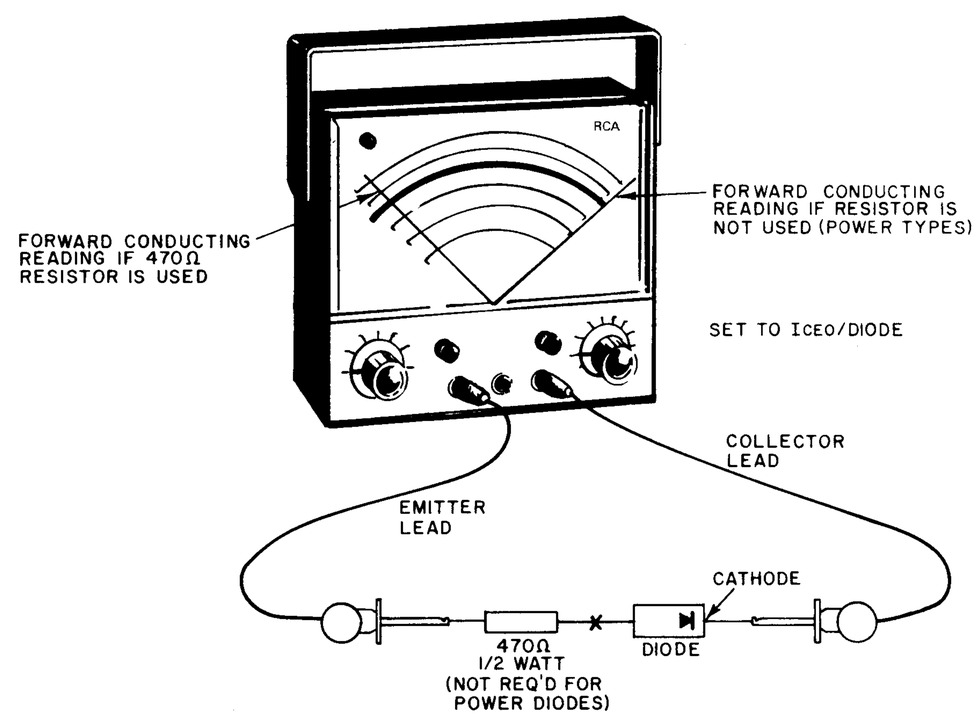

Diode Test

Testing SCR's and Triacs

An approximate "go/no-go" test of the gate-triggering characteristics of silicon-controlled rectifiers (SCR's) and triacs can be made as follows:

1. Set the Selector Switch to "NPN" and the Function Switch to "I_C CAL". Turn the "I_C/I_D CAL" and "Gm/BETA CAL" controls fully counterclockwise.
2. Connect the emitter test lead to the device cathode, the base test lead to the gate, and the collector test lead to the anode. The meter pointer should remain at zero. Any current reading on the 0 - to - 100 mA scale indicates leakage between anode and cathode.
3. Slowly turn the "I_C/I_D CAL control clockwise. The pointer will move slowly. If the device is functioning, at some point the meter pointer will move rapidly toward full scale, and remain there even if the "I_C/I_D CAL" control is turned down. Reset the device by switching the selector switch to PNP, then back to NPN. If the device is good, the pointer will drop down to "0".

Testing UJT's

A test of unjunction transistors (UJT's) can be made with the WT-524A using the following procedure:

1. Set the Selector Switch to "ENH N" and the Function Switch to "Gm CAL". Turn "I_C/I_D CAL" and "BETA/Gm CAL" controls full counter-clockwise.
2. Connect UJT using the test leads or an appropriate socket as shown below:

   Base #1 to drain (blue lead)
   Base #2 to source (yellow lead)
   Emitter to Gate (green lead)
3. The meter pointer should be at "0". Slowly adjust the "I_C/I_D CAL" control so that the meter reads up-scale. Adjust for highest (peak) reading. If meter goes off-scale, set the Function Switch to "Gm X1" and continue to adjust for peak reading. UJT is good if the meter reading can be peaked as described. Many UJT's (such as the popular 2N1671) will normally oscillate as the peak reading is obtained, causing the meter pointer to vibrate.

Testing Special Industrial "Programmable" UJT's

A test of these devices (such as the 2N6028) can be made as follows:

1. Set the Selector Switch to "NPN" and the Function Switch to "BETA". Turn the "I_C/I_D CAL" control fully counterclockwise and the "BETA/Gm CAL" control to mid-range.
2. Connect UJT using the test leads or an appropriate socket as shown below:

Device Lead	Tester Lead
Cathode	Emitter
Gate	Collector
Anode	Base

3. Turn the "I_C/I_D CAL" Control clockwise very slowly until meter reads upscale, indicating that the device has gone into oscillation. This reading may be quite low on the meter, and be very unstable.
4. Turn the "BETA/Gm CAL" control to a point where the meter will peak upscale. This reading represents the output of the device due to its oscillating activity, and the device can be considered good.

   Very low or no output indicated that the device is not good.

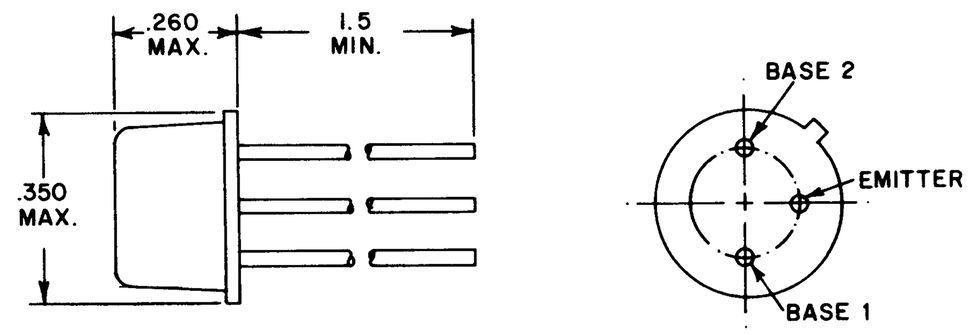

A. Typical UJT outline (type 2N1671).

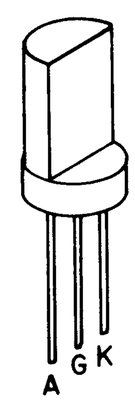

B. Example of special industrial "programmable UJT outline (type 2N6028)."

Figure 2

Facts You Should Know About Testing Transistors

The WT-524A provides an accurate indication of transistor gain and leakage. It is important that the test results be evaluated properly to determine whether the device will operate in a particular circuit. A transistor with low gain or high leakage may operate well in many non-critical circuits, yet would not be acceptable in other circuits requiring full gain and low leakage. In some circuits, bipolar transistors with beta less than half the rated value and leakage current more than twice the specified level will operate satisfactorily. It is therefore necessary to consider the type of circuit in which the transistor is to be used to effectively evaluate the test results.

The following information is helpful in interpreting test results of bipolar transistors.

- Beta (out-of-circuit) of the various types of transistors ranges from about 10 to several hundred. The beta of a transistor normally will not change as the transistor ages.
- Most low-power silicon transistors have very low leakage, with I_{CBO} usually less than 1 microamp (1 μA). High-power silicon transistors can indicate an I_{CBO} up to 50 μA.
- Germanium transistors normally have more leakage than silicon transistors. I_{CBO} can range from several microamperes to as high as 5 milliamperes, especially in high-power transistors.
- I_{CEO} leakage is always higher than I_{CBO}, because $I_{CEO} = (\beta + 1)\ I_{CBO}$.
- Leakage varies significantly with temperature. Even body heat from holding a transistor in your hand can increase the leakage-current flow.
- If a transistors is tested at an I_C current level higher than its capability, it will saturate.
- In-circuit dc beta measurement will often be lower than out-of-circuit measurement. The in-circuit gain for a particular transistor can vary depending on the resistance of the circuit in which it is used.
- The WT-524A test voltage is limited to 4 volts to prevent damaging low-power transistors. Gain and leakage characteristics normally do not change appreciably with changes in operating voltage. It is possible however that a power transistor will test normally, yet not operate in-circuit due to breakdown at higher voltage levels.

FET TEST PRECAUTIONS

Testing field-effect devices requires observing specific precautions as follows:

1. You must know whether the device is a JFET or MOS-FET.
2. You must know whether the FET is an n-channel or p-channel type.
3. If the device is a MOSFET, you must know if it is an enhancement or depletion type.

Do not attempt to remove from the circuit or handle an FET unless certain that the device is a JFET or an insulated-gate-protected MOSFET. This verification is essential, because an unprotected insulated-gate MOSFET may be damaged unless proper handling precautions are taken. When handling or inserting or removing this type of MOSFET the following precautions should be observed:

1. Prior to assembly into a circuit, all leads should be kept shorted together by either the use of metal shorting springs attached to the device by the vendor, or by the use of a conductive foam. Note—polystyrene "snow" should not be used because it can acquire high static charges.
2. When devices are removed by hand from their carriers, the hand being used should be at ground potential.
3. Tips of soldering irons should be grounded.
4. Devices should never be inserted into or removed from circuits with the power on.

Transistor Identification

Most transistors have standard construction and lead arrangement. Except for power types, these transistors can be tested easily out-of-circuit using the transistor or FET universal test adapter socket. For testing devices that cannot be plugged into the adapter sockets, and for making in-circuit tests, use the three test leads that are supplied. For repeated testing of long-lead or power-type transistors, it is more convenient to use a special socket adaptor. Adaptors include the Tektronix* type 013-070 for power types (TO-3), Tektronix 013-069 and Pamona** type 1472 for long-lead types. These adaptors plug directly into the panel jacks of the Tester.

Identifying Transistor Lead Connections

Occasionally, it may be necessary to test a transistor that does not have a standard terminal configuration. In this situation, the terminals can be identified by referring either to the manufacturer's data or to a schematic diagram in which the device is used. As an aid to transistor identification, typical transistor symbols and transistor basing outlines showing lead arrangements are illustrated in Figures 3, 4, 5, and 6.

Note: Some bipolar RF transistors have a fourth lead connected to the internal shield. Connection to this shield lead is not required in the test procedure. Similarly, FET's may have a lead designated as "substrate," "case," or "bulk." Connection to this lead is not required for testing purposes.

NPN or PNP

If you are uncertain whether a transistor is a NPN or PNP type, first check the schematic symbol for the device, if available. Figure 1 shows NPN and PNP symbols. If no

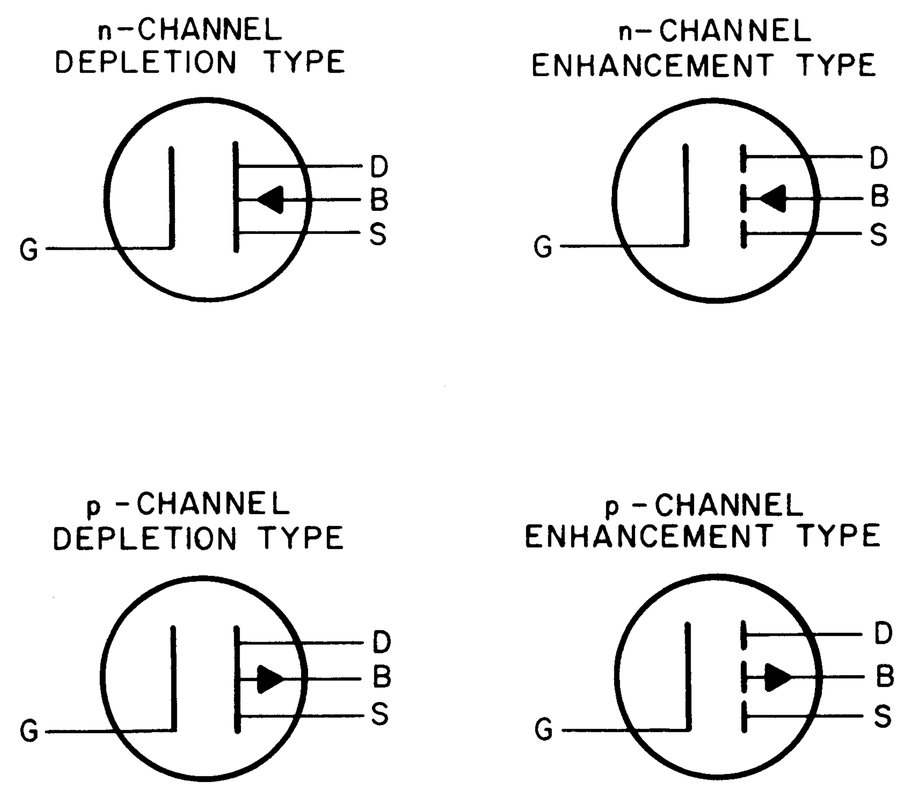

Schematic symbols for MOS transistors (G = gate, D = drain, B = active bulks, S = source).

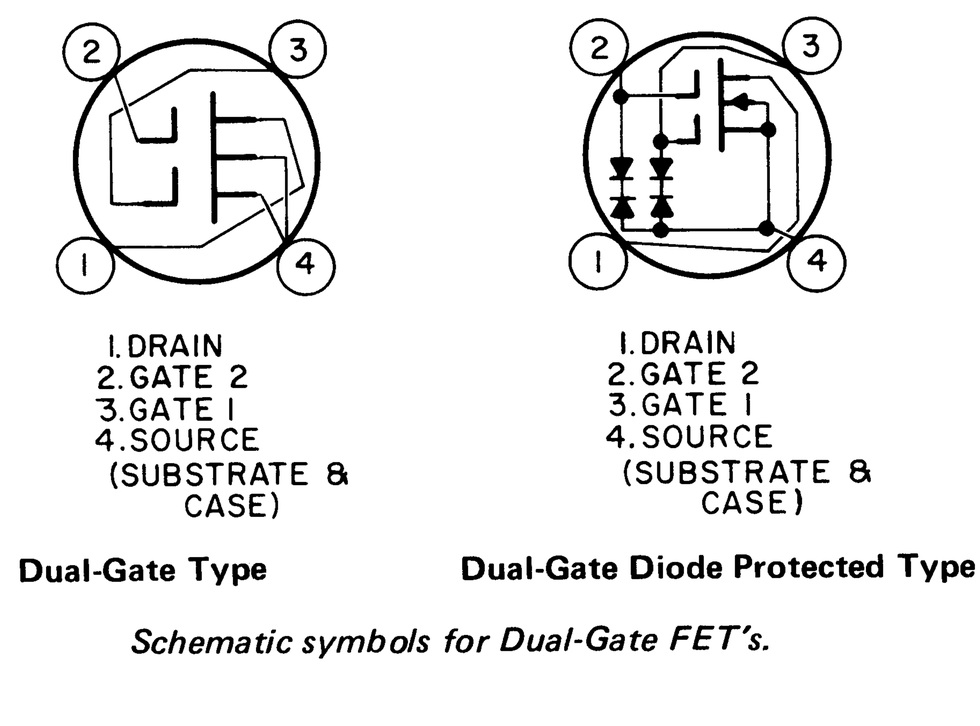

Schematic symbols for Dual-Gate FET's.

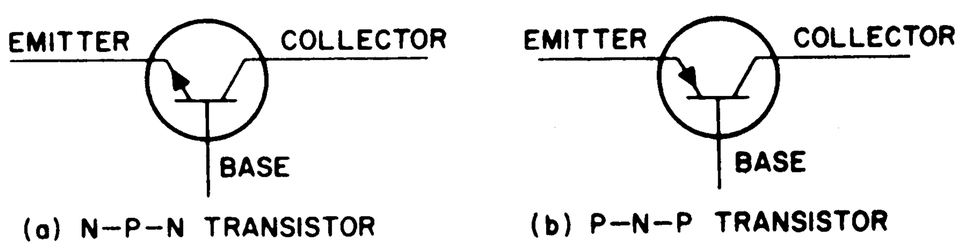

Figure 3. PNP and NPN transistor circuit symbols.

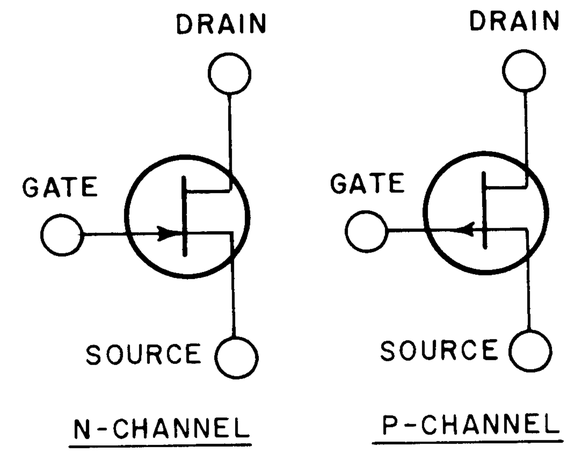

Schematic symbols for Junction Type Transistors.

Figure 4. Typical FET circuit symbols.

* Tektronix Corp., P.O. Box 500, Beaverton, Oregon

** Pomona Electronics Co. Inc., 1500 E. Ninth Street, Pomona, California

schematic is available, try testing the transistor as a PNP type. If it is a PNP, the test will proceed normally. If it is an NPN, the I_C CAL control will be inoperative and the meter will peg in the I_{CBO} functions.

Identifying N-or P-Channel, Depletion and Enhancement FET's

The FET schematic diagram symbol will indicate whether the device is N or P channel, enhancement or depletion. See Figure 4. If you don't have the schematic diagram and can't identify the device, proceed as follows. Since most FET's are depletion types, try testing it as a depletion, N type. If it is, the test will proceed normally. If not, continue testing it first as depletion, P type, then enhancement N and P type. Unless the device is bad, a test with the correct setting (N or P, depletion or enhancement) will provide normal Gm test results. These test will not damage the device, regardless of what type it might be.

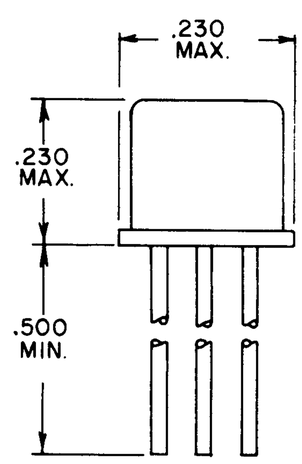

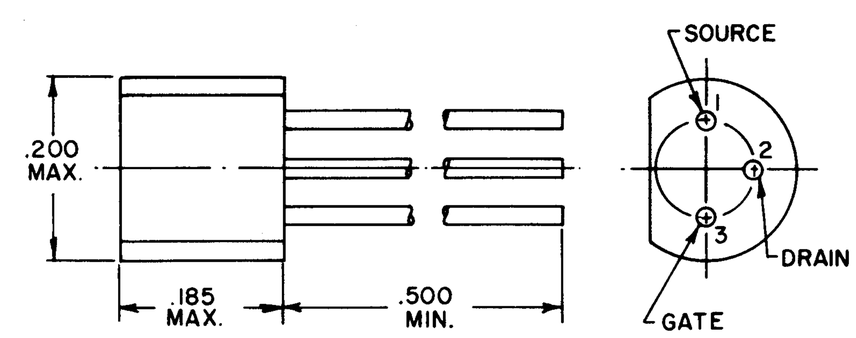

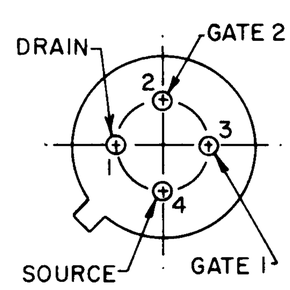

Dual-Gate Type

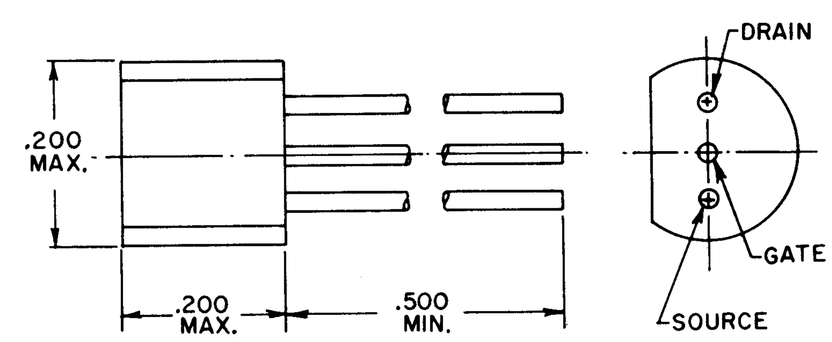

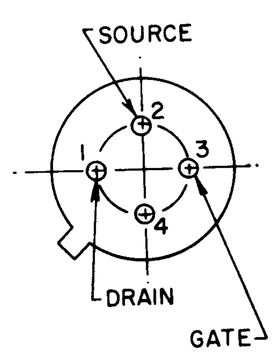

Single-Gate Type

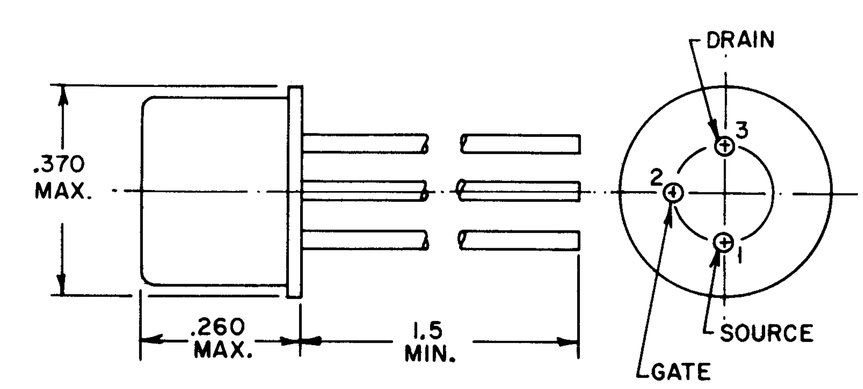

Figure 5. FET outline.

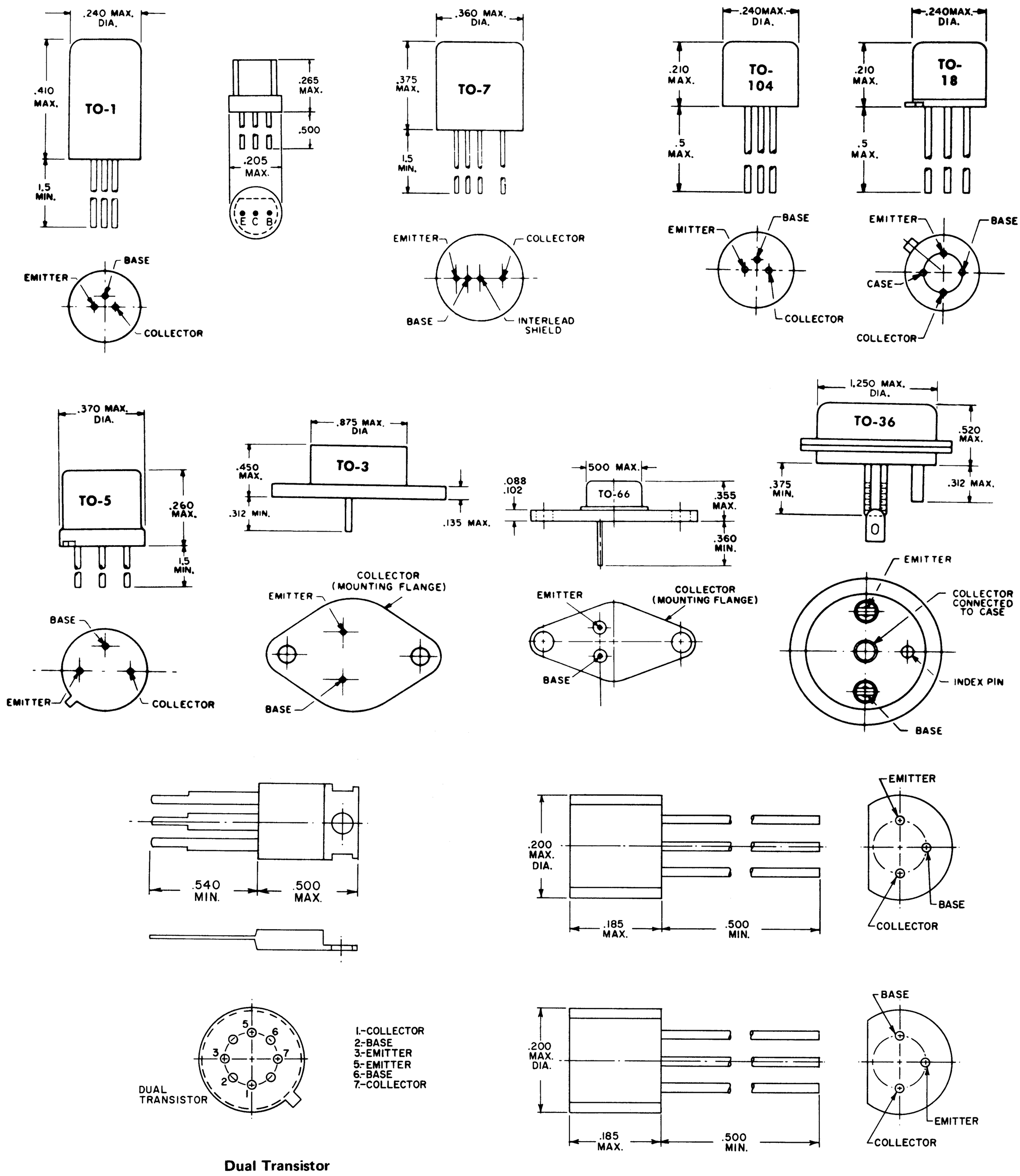

Dual Transistor

Figure 6. Transistor outlines.

Maintenance

RCA Repair Service

Authorized RCA Test Equipment Service Depots are available for repair and calibration of this equipment. For the name of the depot nearest you, contact your RCA Test Equipment distributor, or write to RCA Electronic Instruments, 415 South Fifth Street, Harrison, New Jersey 07029.

General

The performance of the WT-524A depends on the quality of the components. If it becomes necessary to replace any of the component parts, only RCA replacement parts or their equivalents should be used. When ordering parts, refer to the Parts List on page 23.

The schematic diagram for the instrument is on page 20. Further aids to servicing include the Circuit Description, below, and Figure 15, showing the component layout on the main circuit board.

Removing the Case

To remove the case for servicing, take out the four screws on the rear of the instrument case.

Mechanical-Zero Adjustment

The meter pointer should rest at the left-hand zero mark when the Selector Switch is turned to the "OFF" position. If the pointer should come to rest at a deflection position, it can be adjusted as follows:

1. Remove the meter-adjustment hole cover.

   CAUTION: Extreme care must be taken in the next step to prevent insertion of the tool to a depth which will injure the pointer spring. The meter warranty does not cover such damage.

2. Insert a toothpick or similar insulated tool to engage the zero-adjustment lever, and move the lever laterally as required to bring the pointer to "0".
3. Replace the meter-adjustment plug.

240-Volt Operation

The WT-524A can be operated at either 120 volts or 240 volts, 50/60 Hz, and is shipped set for 120-volt operation.

The mode of operation is selected by setting switch S3, located inside the instrument on the upper metal chassis bracket, next to the power transformer. Use a screwdriver to re-set the switch. Viewed from the front of the instrument, set the switch to the left for 120-volts and to the right for 240 volts, as indicated on the switch.

Calibration Procedure

Calibration of the WT-524A requires an AC Voltmeter, such as the RCA WV-76A.

1. Set the Selector Switch to "DEP. N", and the Function Switch to "Gm CAL". Set internal calibration controls R115 and R122 (see Figure 15 for location) to mid-range.
2. Connect the AC voltmeter probe to the green panel "B/G" jack. Connect the voltmeter ground lead to the "E/S" panel jack.
3. Adjust R106 "BETA/Gm CAL control, for a reading of exactly 1 volt on the AC voltmeter.
4. Adjust R122 for peak (maximum) meter reading on the WT-524A. If necessary, reduce setting of R115 as required to keep meter reading below full-scale while making the R122 adjustment.
5. Adjust R115 for exactly full-scale reading on the WT-524A.

Circuit Description

A precision 0 to 1 volt AC voltmeter circuit is formed by transistor Q101 and Q102, diodes CR111 and CR112, and M1, the 100 μA meter. This basic circuit is used to indicate beta and Gm values.

Transistor Test Circuit

A simplified diagram of the beta measuring circuit is shown in Figure 7. Diagrams showing I_{CEO} and I_{CBO} test circuits are shown in Figures 8 and 9.

An AC signal obtained from a special winding on transformer T1 is applied through the Beta Cal. control R106, to the base of the transistor under test.

Base bias voltage is applied through the I_C CAL. Control (R105) to the transistor base. In the I_C CAL. function, the meter circuit consisting of series resistor R119 and R120, along with shunt resistor R116, form a 0 to 200 mA measuring circuit. The I_C CAL. Control is adjusted to provide the desired collector current level. Two bypass capacitors, C109 and C110 are connected back-to-back so that either positive or negative bias voltage can be applied for testing NPN or PNP devices.

Adjustment of R106, BETA CAL., is made by monitoring the voltage drop across resistor R117. This voltage represents the base current level. When BETA CAL. is adjusted to "Beta X1" (full-scale), one volt is applied to the metering circuit. When Beta CAL. is

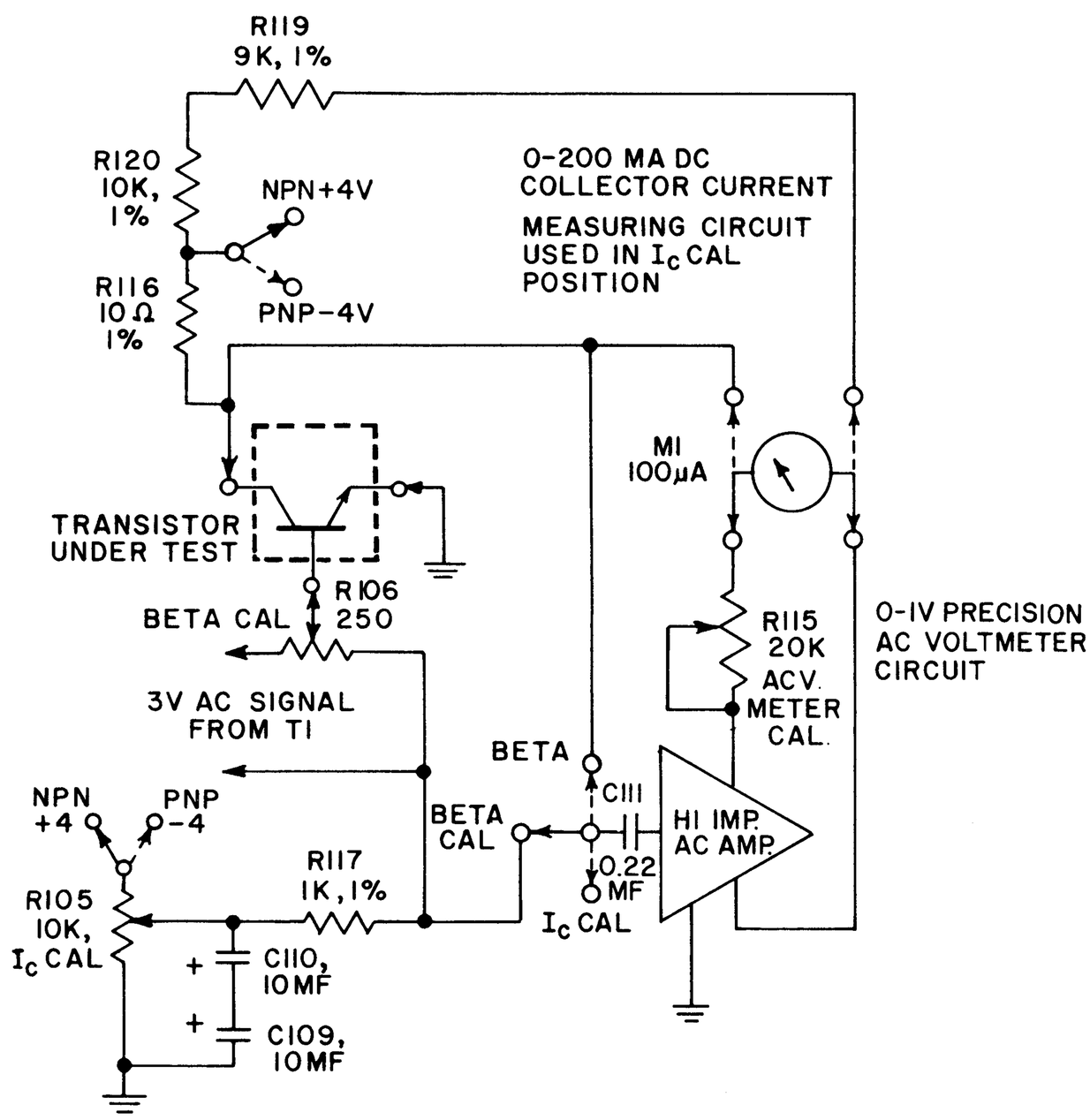

Figure 7. Simplified drawing of transistor test circuit.

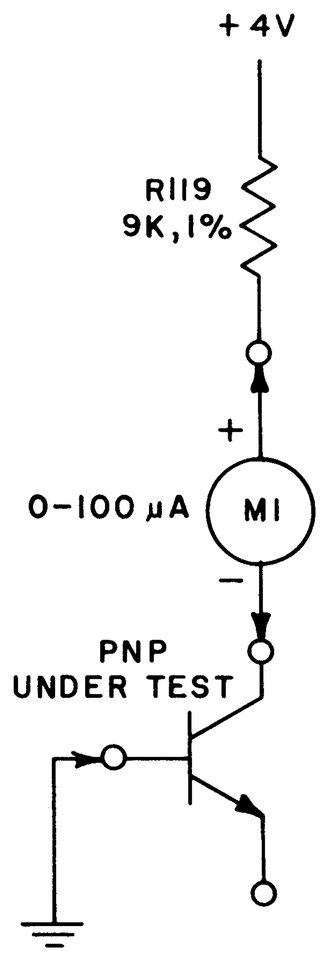

Figure 9. I_{CBO} test circuit.

adjusted to "X10" or "X50", the AC input current to the transistor is reduced one-tenth and on-fiftieth, respectively.

To measure beta, the voltage at the transistor collector is applied to the metering circuit. Since the base current is established at a known level (Beta CAL. adjustment), the collector voltage is interpreted directly in terms of beta.

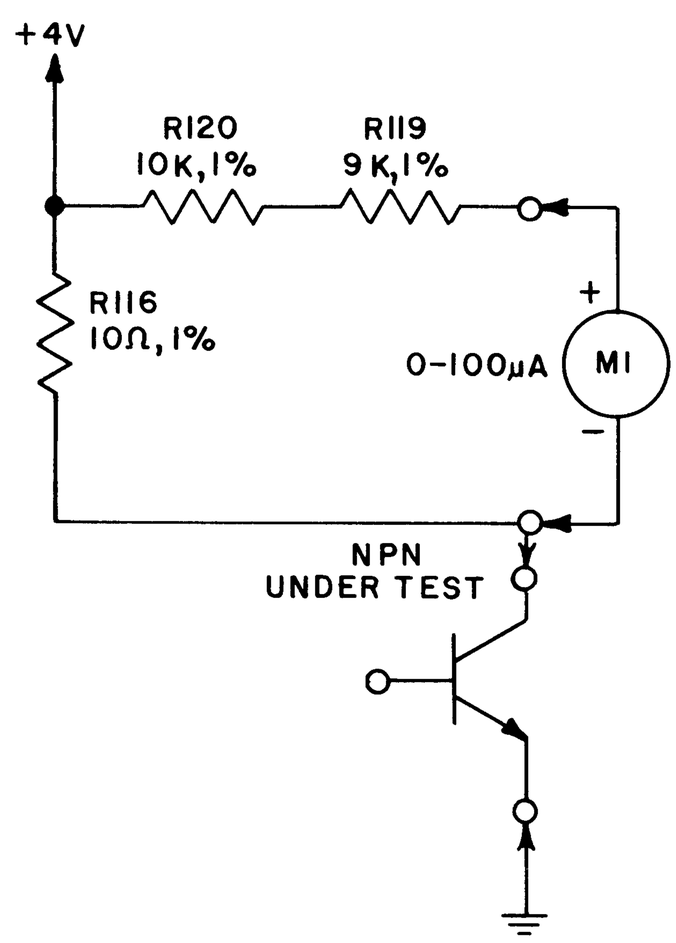

Figure 8. I_{CEO} test circuit.

FET Test Circuit

A simplified diagram of the FET measuring circuit is shown in Figure 10. Diagram showing I_{DSS} current test circuit is shown in Figure 11.

In the FET test, an AC signal is applied through R106, "BETA/Gm CAL". to the voltage divider circuit formed by precision resistors R103 and R104. In the Gm CAL. procedure, R106 is adjusted so that one volt is applied to the measuring circuit, causing full-scale meter deflection. When the Function Switch is set to "Gm X10", this voltage is reduced to one-tenth of a volt.

A DC gate bias circuit is provided for use only in testing enhancement type FET's. This circuit consists of adjustable control R105, "I_C/I_D CAL. (ENH.)" and bypass capacitors C109 and C110.

The metering circuit consisting of R119 and R120 together with shunt resistor R118, measure from 0 to 20 mA for I_D CAL. of enhancement devices and for I_{DSS} testing.

To measure Gm, the voltage developed across R118 is measured and indicated on the meter directly in micromhos. Gate leakage (I_{GSS}) is measured during the Gm test procedure. The pushbutton switch on the WG-454A Socket Adapter places a 3.3 megohm resistor in series with the FET gate. Any leakage resistance between the gate and the source reduce the Gm meter indication.

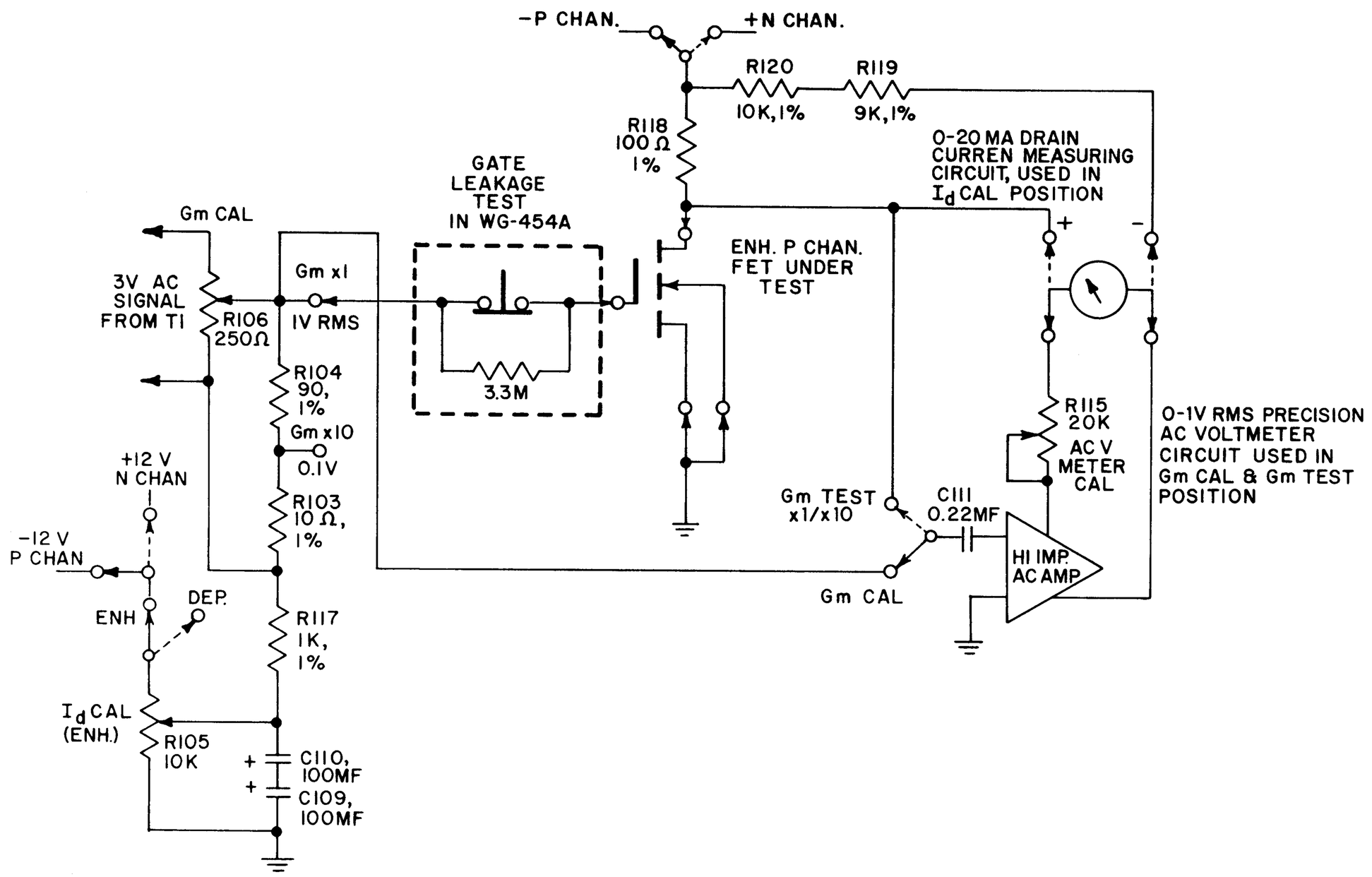

Figure 10. Simplified drawing of FET test circuit.

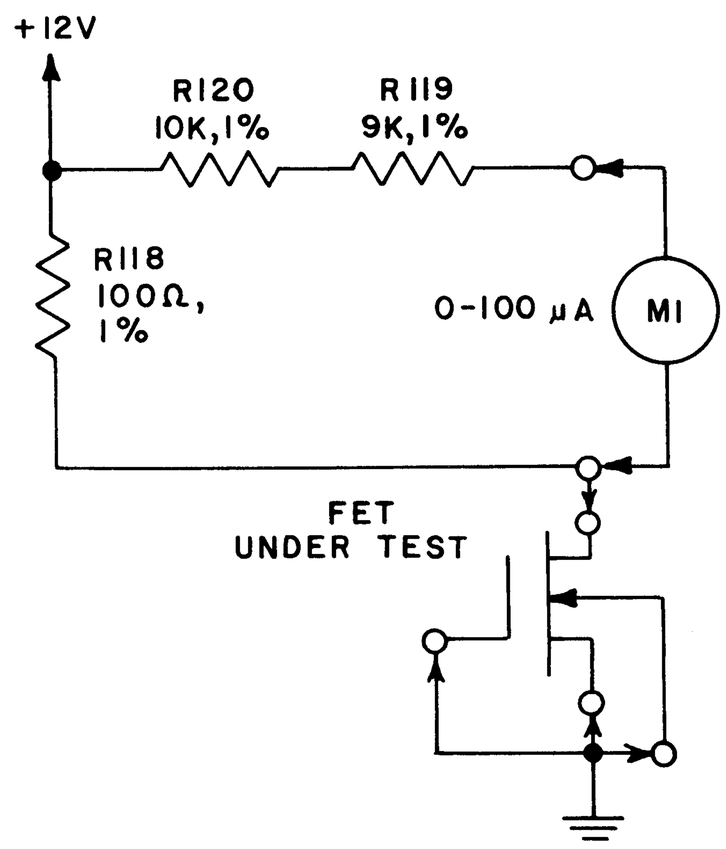

Figure 11. I_{DSS} test circuit.

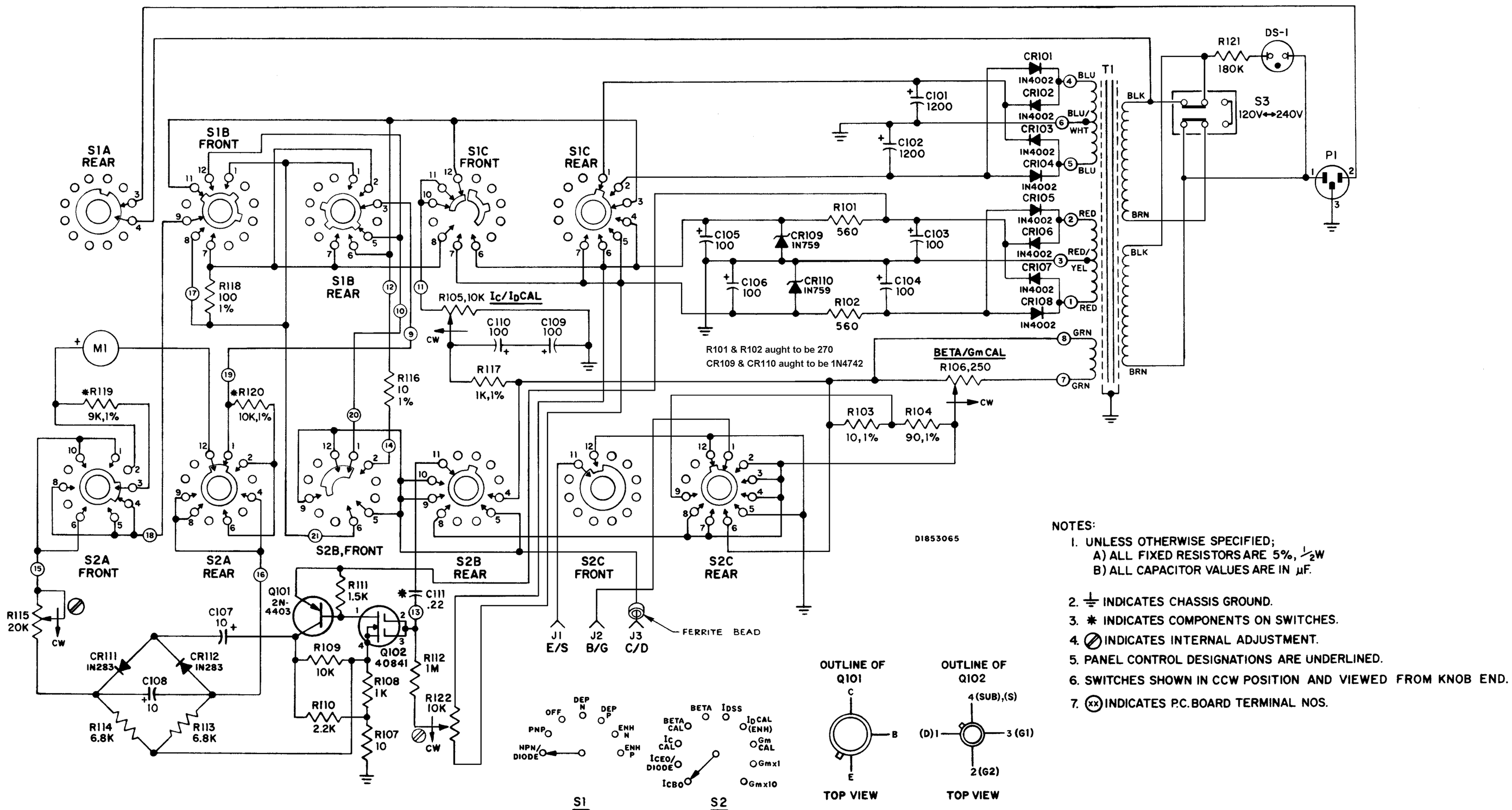

NOTES:

1. UNLESS OTHERWISE SPECIFIED;
   A) ALL FIXED RESISTORS ARE 5%, 1/2W
   B) ALL CAPACITOR VALUES ARE IN µF.
2. ⏚ INDICATES CHASSIS GROUND.
3. ✱ INDICATES COMPONENTS ON SWITCHES.
4. ⊘ INDICATES INTERNAL ADJUSTMENT.
5. PANEL CONTROL DESIGNATIONS ARE UNDERLINED.
6. SWITCHES SHOWN IN CCW POSITION AND VIEWED FROM KNOB END.
7. (xx) INDICATES P.C. BOARD TERMINAL NOS.

Figure 12. WT-524A schematic diagram.

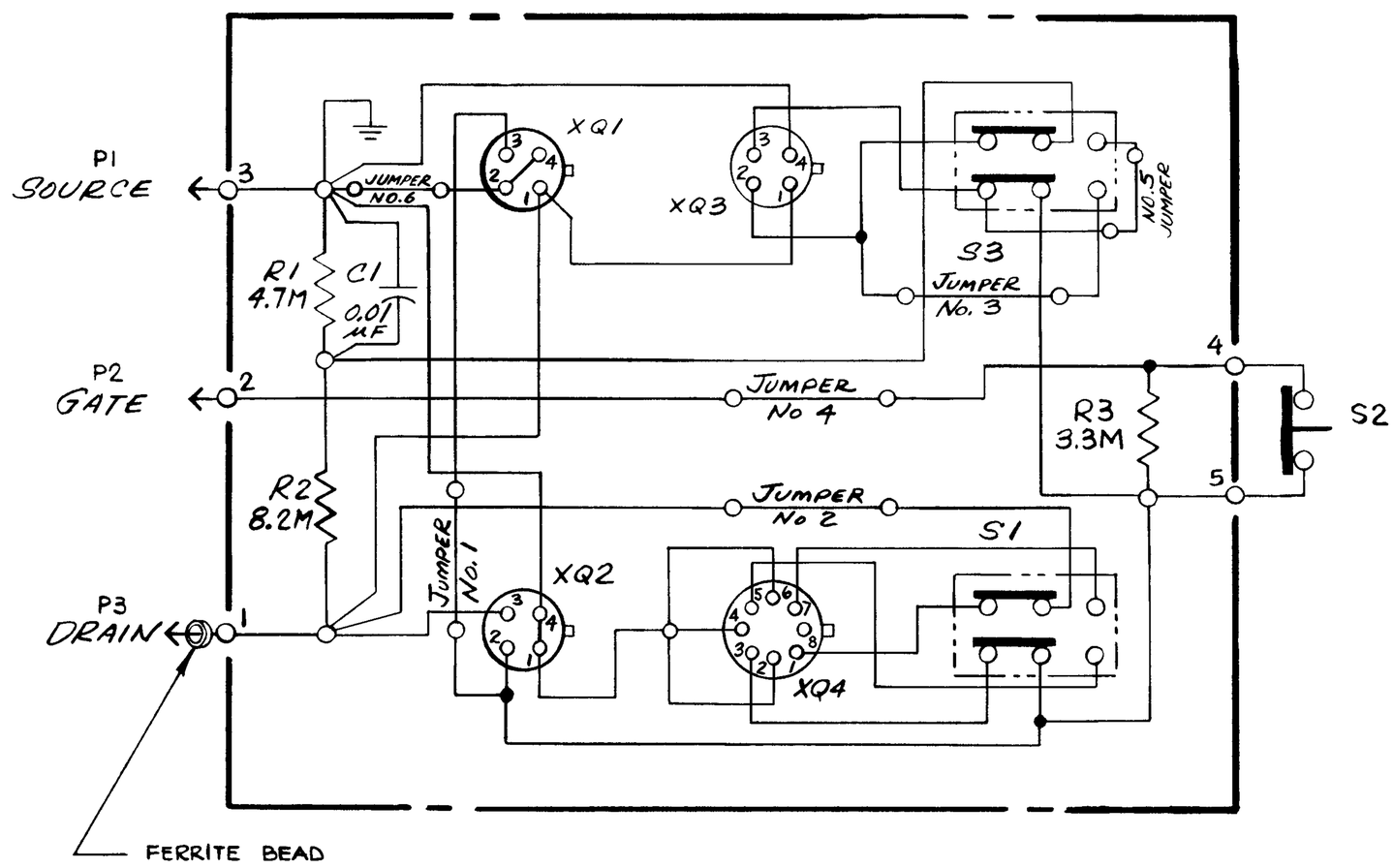

Figure 13. WG-454A schematic diagram.

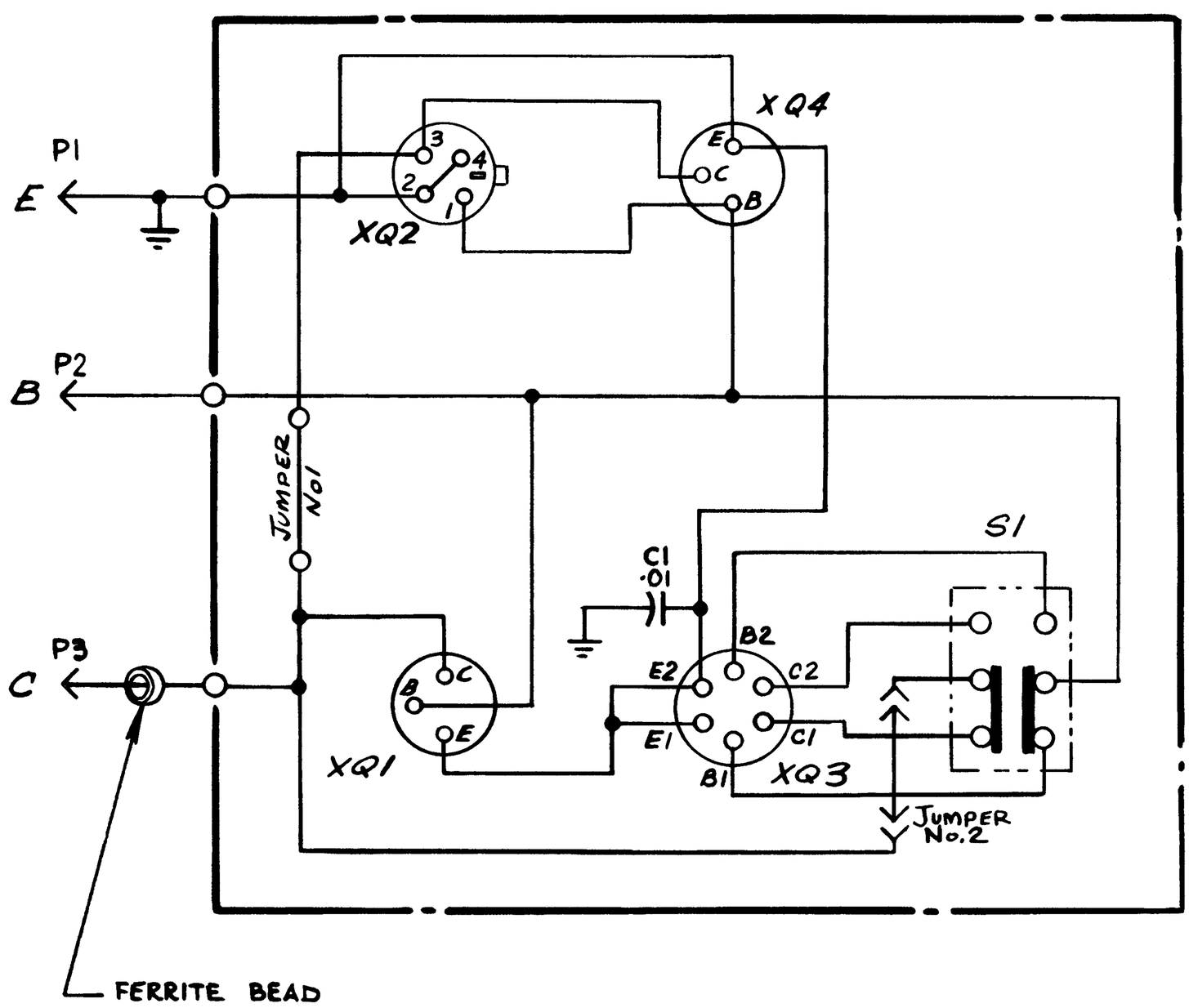

Figure 14. WG-455A schematic diagram.

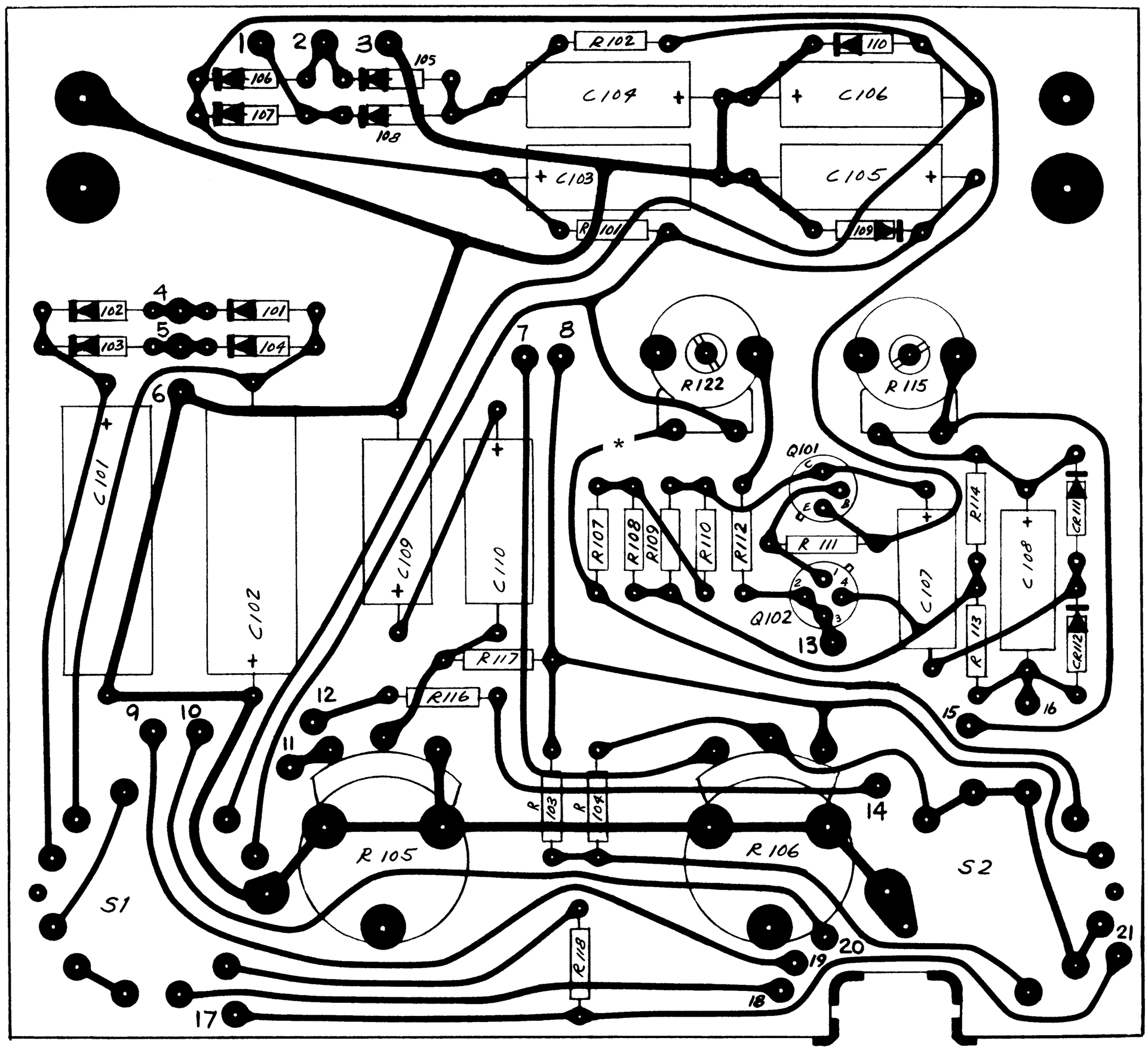

Figure 15. Component location.

Replacement Parts List

When ordering replacement parts, include serial number and code number of instrument. Order parts by stock number, through a local RCA Distributor.

Symbol	Description	Stock Number
	RESISTORS	
R101	Film, 560 ohms, 5%, ½ W	224252
R102	Film, 560 ohms, 5%, ½ W	224252
R103	Metal Film, 10 ohms, 1%, ½ W	234921
R104	Metal Film, 90 ohms, 1%, ½ W	426544
R105	Variable, 10,000 ohms, "I_C/I_D CAL"	426541
R106	Variable, 250 ohms "BETA/Gm CAL"	426542
R107	Film, 10 ohms, 5%, ½ W	239417
R108	Film, 1000 ohms, 5%, ½ W	224254
R109	Film, 10,000 ohms, 5%, ½ W	229716
R110	Film, 2200 ohms, 5%, ½ W	228712
R111	Film, 1500 ohms, 5%, ½ W	228915
R112	Film, 1 megohm, 5%, ½ W	243004
R113	Film, 6800 ohms, 5%, ½ W	228715
R114	Film, 6800 ohms, 5%, ½ W	228715
R115	Variable, 20,000 ohms, 30%	426565
R116	Metal Film, 10 ohms, 1%, ½ W	234921
R117	Metal Film, 1000 ohms, 1%, ½ W	227848
R118	Metal Film, 100 ohms, 1%, ½ W	237414
R119	Metal Film, 9000 ohms, 1%, ½ W	056723
R120	Metal Film, 10,000 ohms, 1%, ½ W	236087
R121	180,000 ohms, 5%, ¼ W	426543
R122	Variable, 10K ohms, 30%	248094

	CAPACITORS	
C101	Electrolytic, 1200 MF, 6 V	426535
C102	Electrolytic, 1200 MF, 6 V	426535
C103 TO		
C106	Electrolytic, 100 MF, 20 V	426538
C107	Electrolytic, 10 MF, 25 V	426534
C108	Electrolytic, 10 MF, 25 V	426534
C109	Electrolytic, 100 MF, 20 V	426538
C110	Electrolytic, 100 MF, 20 V	426538
C111	Mylar/paper, 0.22 MF, 10%, 100 V	426539

	TRANSISTORS AND DIODES	
Q101	Transistor – Type 2N4403	424229
Q102	Transistor – Type 40841	426669
CR101 TO		
CR108	Diode – Type 1N4002, Silicon	234761
CR109	Diode – Type 1N759, Zener	249742
CR110	Diode – Type 1N759, Zener	249742
CR111	Diode – Type 1N283	423048
CR112	Diode – Type 1N283	423048

Symbol	Description	Stock Number
	MISCELLANEOUS	
S1	Switch, Rotary, Selector	426514
S2	Switch, Rotary, Function	426513
S3	Switch – Slide, DPDT	422337
T1	Transformer – Power	426516
DS1	Lamp – Indicating	218017
J1	Jack – Yellow	242270
J2	Jack – Green	242268
J3	Jack – Blue	242269
M1	Meter Assembly	426517
	Meter Case, Front	210287
	Meter Case, Rear	217745
	Power Cord	422334
	Case – Front	426521
	Case – Rear	426520
	Panel – Front	426519
	Handle – Carrying	426518
	Knob – Control	426512
	Feet	424214
	Printed Circuit Board	426515

	WG-454A Universal FET Socket Adapter	
R1	Resistor, 4.7 megohms, 5%, ½ W	502547
R2	Resistor, 8.2 megohms, 5%, ½ W	502582
R3	Resistor, 3.3 megohms, 5%, ½ W	502533
S1	Switch, Slide, DPDT, Dual "1, 2"	427710
S2	Switch, Pushbutton, "Leak, Test"	427713
S3	Switch, Slide, DPDT, "G1, G2"	427710
XQ1, XQ2, XQ3	Socket, FET 4 Pin	232021
XQ4	Socket, FET, 8 Pin	427711
C1	Capacitor, 0.01 MF	427706
	Printed Circuit Board	427714
	Banana Plug	427708

	WG-455A Universal Transistor Socket Adapter	
S1	Switch "Dual 1, 2"	427710
XQ1, XQ4	Socket, Transistor, 3-Term.	427712
XQ2	Socket, Transistor, 4-Term.	232021
XQ3	Socket, Transistor, 6-Term.	427707
	Printed Circuit Board	427715
	Banana Plug	427708
	Ferrite Bead	427709
C1	Capacitor, 0.01 MF	224570

RCA | Electronic Instruments | Harrison, N. J. 07029

K4XL's BAMA

This manual is provided FREE OF CHARGE from the “BoatAnchor Manual Archive” as a service to the Boatanchor community.

It was uploaded by someone who wanted to help you repair and maintain your equipment.

If you paid anyone other than BAMA for this manual, you paid someone who is making a profit from the free labor of others without asking their permission.

You may pass on copies of this manual to anyone who needs it. But do it without charge.

Thousands of files are available without charge from BAMA. Visit us at http://bama.sbc.edu